Flow Meter TZ1-...GR

- **Large analog display**
- **Monitor and display**
- **Simple adjustment by means of drag indicator**
- **Insensitive to dirt**
- **Short installation length**

Characteristics

The volume flow raises a piston out from a valve seat against a spring force. The piston actuates the display movement by means of a magnetic coupling.

Technical data

Switch	optionally micro switch	
Nominal width	DN 8..80	
Process connection	female thread G $^1/_4$..G 3	
Metering range	2..600 l/min	for details see table "Ranges"
$Q_{max.}$	to 600 l/min	
Tolerance	±3 % of full scale value	
Pressure resistance	G $^1/_4$..G $^1/_2$ - PN 100 bar G $^3/_4$..G 1 - PN 25 bar G $1^1/_4$ .. G 3 - PN 16 bar	
Medium temperature	-20..+90 °C	
Ambient temperature	-20..+70 °C	
Media	water (oils and gases available on request)	
Wiring	changeover no. 0.342 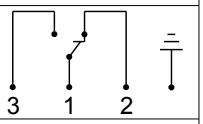	
Switching voltage	max. 250 V AC	
Switching current	max. 5 A	
Protection class	2 - safety insulation	
Ingress protection	IP 65	
Connection	plug DIN 43650-A / ISO 4400	
Materials medium-contact	Rg 5 / Rg 6 nickelled, CW614N, 1.4310, NBR, hard ferrite	
Non-medium-contact materials	CW614N chromed, steel chromed, Acrylic, NBR	
Weight	see table "Dimensions and weights"	

Installation location	Standard: horizontal inwards flow; display downwards not recommended; other installation positions are possible; the installation position affects the switching point and display range.

Ranges

Details in the table correspond to horizontal inwards flow with increasing flow rate.

G	Nominal width	Metering range l/min H_2O	$Q_{max.}$ recommended	Type
G $^1/_4$	DN 8	2 - 6	8	TZ1-008GR006
		3 - 12	12	TZ1-008GR012
G $^3/_8$	DN 10	2 - 6	10	TZ1-010GR006
		3 - 12	12	TZ1-010GR012
G $^1/_2$	DN 15	2 - 6	20	TZ1-015GR006
		4 - 20		TZ1-015GR020
G $^3/_4$	DN 20		40	TZ1-020GR020
		10 - 40		TZ1-020GR040
G 1	DN 25	10 - 60	60	TZ1-025GR060
G $1^1/_4$	DN 32	10 - 100	100	TZ1-032GR100
G $1^1/_2$	DN 40	10 - 150	150	TZ1-040GR150
G 2	DN 50	20 - 250	250	TZ1-050GR250
G $2^1/_2$	DN 65	30 - 400	400	TZ1-065GR400
G 3	DN 80	30 - 600	600	TZ1-080GR600

Special ranges are available

Dimensions and weights

G	Types	H	L	SW	X	Weight kg
G $^1/_4$	TZ1-008GR	212	68	29	12	1.6
G $^3/_8$	TZ1-010GR					
G $^1/_2$	TZ1-015GR				13	
G $^3/_4$	TZ1-020GR	213	73	32	11	1.7
G 1	TZ1-025GR	216	87	41	12	2.0
G $1^1/_4$	TZ1-032GR	226	98	52	13	2.6
G $1^1/_2$	TZ1-040GR	228	113	59	14	3.1
G 2	TZ1-050GR	236	137	72	17	6.4
G $2^1/_2$	TZ1-065GR	268	160	85	26	7.5
G 3	TZ1-080GR		148	100	23	8.7

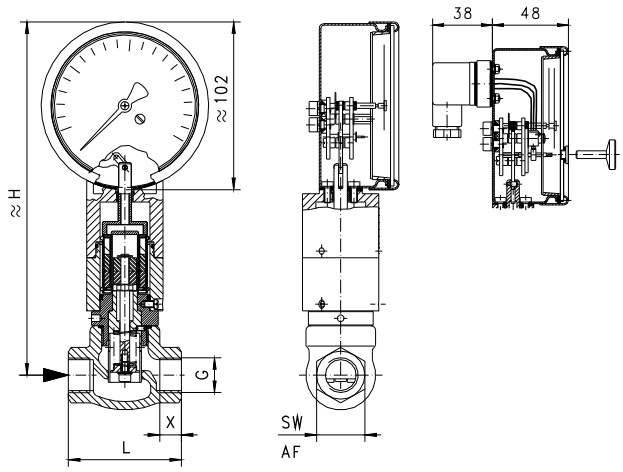

Handling and operation

Note

- Include straight calming section of 5 x DN in inlet and outlet
- Include a filter if the media are dirty (use magnetic filter for ferritic components).
- It must be ensured that the values given for voltage, current, and power are not exceeded.
- When switched on, a load must be connected in series.
- The electrical details apply to ohmic loads. Capacitive and inductive loads must be operated using a protective circuit.

Adjustment

The micro switch (optional) is adjusted by means of the knurled adjusting screw provided. The screw allows the drag indicator to be set to the desired switching value. The value displayed corresponds to a switching point for a decreasing flow rate.

Ordering code

	1.	2.	3.	4.	5.
TZ1			**G**	**R**	

❍=Option

1.	**Additional devices**		
	-	only analog display	
	M-	with integrated micro switch	
	P- ❍	with potentiometer	see „Additional devices for TZ1"
	M2- ❍	with 2 x normally open (n.o.)	see „Additional devices for TZ1"
	M3- ❍	with 2 x normally closed (n.c.)	see „Additional devices for TZ1"
2.	**Nominal width**		
	008	DN 8 - G $^1/_4$	
	010	DN 10 - G $^3/_8$	
	015	DN 15 - G $^1/_2$	
	020	DN 20 - G $^3/_4$	
	025	DN 25 - G 1	
	032	DN 32 - G $1^1/_4$	
	040	DN 40 - G $1^1/_2$	
	050	DN 50 - G 2	
	065	DN 65 - G $2^1/_2$	
	080	DN 80 - G 3	
3.	**Process connection**		
	G	female thread	
4.	**Connection material**		
	R	red bronze	
5.	**Metering range H_2O for horizontal inwards flow**		
	006	2 - 6 l/min	
	012	3 - 12 l/min	
	020	4 - 20 l/min	
	040	10 - 40 l/min	
	060	10 - 60 l/min	
	100	10 - 100 l/min	
	150	10 - 150 l/min	
	250	20 - 250 l/min	
	400	30 - 400 l/min	
	600	30 - 600 l/min	

	008	010	015	020	025	032	040	050	065	080
006									●	●	●
012										●	●
020								●	●		
040								●			
060							●				
100						●					
150					●						
250				●							
400			●								
600	●										

Options

- Gold contact micro switch
  - min: 5 V DC, 1 mA
  - max: 125 V AC, 30 V DC, 1 A
- Special Harting plug
- Metering ranges for oil or gas
- Special values

Ordering information

- Specify direction of flow, medium, and metering range.
- For oils. State viscosity, temperature and designation (e.g. ISO VG 68) (enquire about metering range).
- For gases, state pressure (relative or absolute), temperature and medium (e.g. air) (request metering range)