tork valve & automation

fluid under control

REA40 24V DC & 85 - 265V AC WIRING DIAGRAM

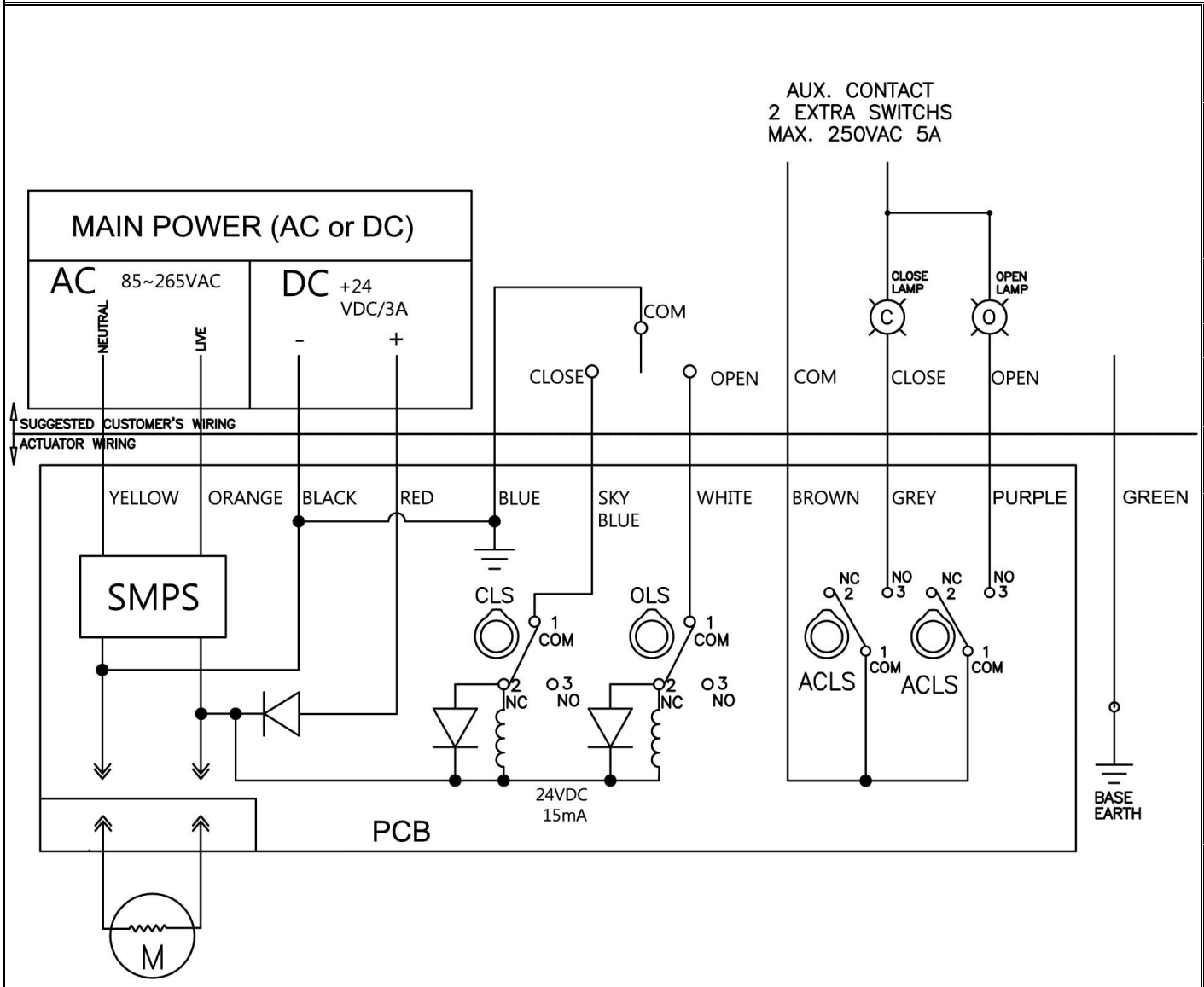

SYMBOL	DESCRIPTION	RATING
CLS	Close Limit Switch	250V AC 5A
OLS	Open Limit Switch	250V AC 5A
ACLS	Aux. Close Limit Switch	250V AC 5A
AOLS	Aux. Open Limit Switch	250V AC 5A

WARNING

Each other should be powered through its own individual switch on relay contacts o prevent cross feed between two or more actuators.

REA 40		**DWG NO**
		DEP: R&D
85-265V AC **24V DC**	**DATE:** 10.09.2016	

SMS Sanayi Malzemeleri Satışı ve Üretim A.Ş

HEAD OFFICE Y. Dudullu, Bostancı Yolu, Kuru Sok, No16 Ümraniye 34776 İstanbul - TURKEY P +90 216 364 34 05 F +90 216 364 37 57
FACTORY İMES O.S.B. 5. Cadde No6 Çerkeşli O.S.B. Mahallesi Dilovası Kocaeli - TURKEY P +90 262 290 20 20 F +90 262 290 20 21
SMS Sanayi Malzemeleri Üretim ve Satış A.Ş /SMSTORK /sms-tork www.smstork.com