tork valve & automation

fluid under control

REA150-3000-110&220V AC PROPORTIONAL ELECTRIC ACTUATOR WIRING DIAGRAM

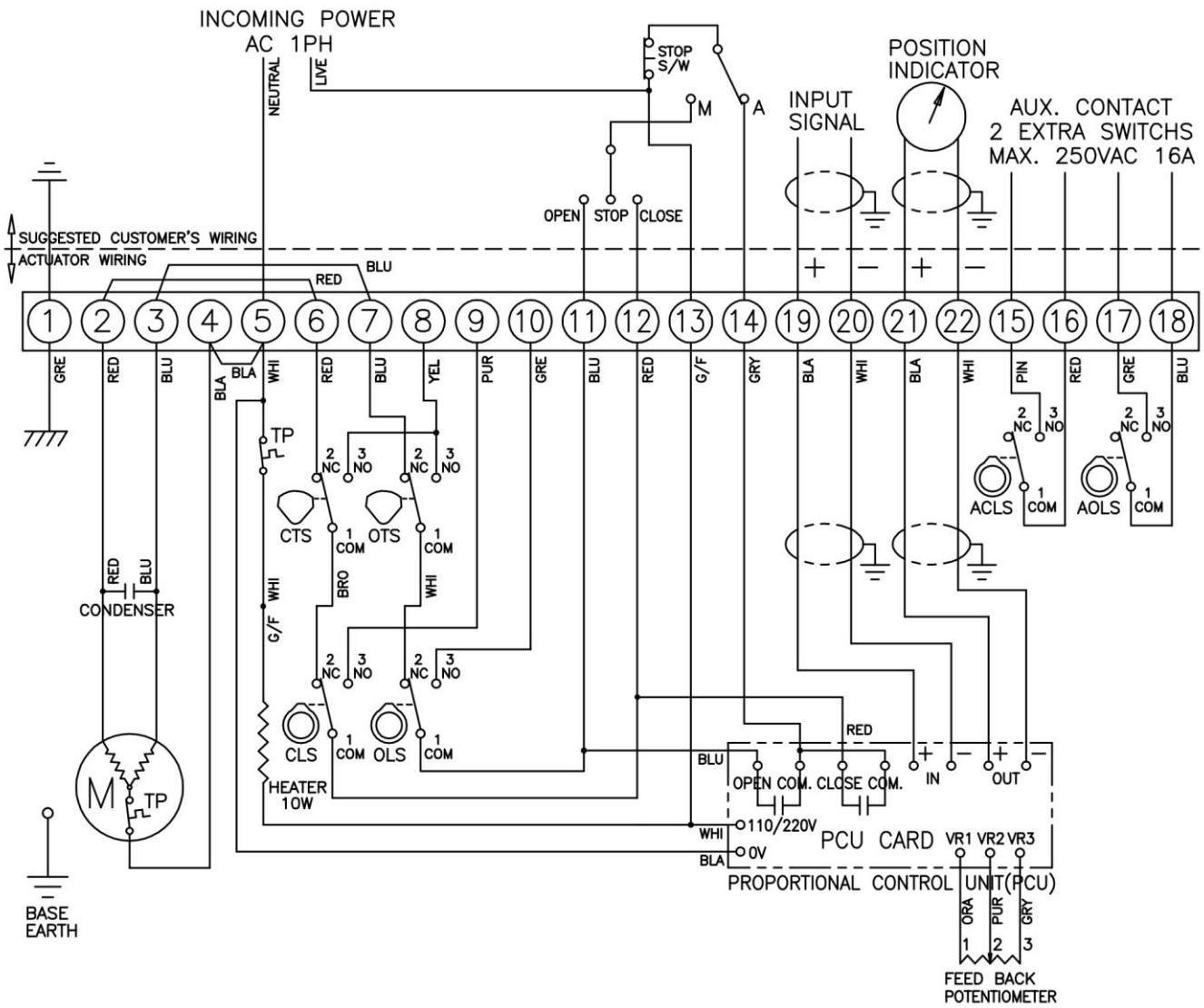

SYMBOL	DESCRIPTION	RATING
CLS	Close Limit Switch	250V AC 10A
OLS	Open Limit Switch	250V AC 10A
CTS	Close Torque Switch	250V AC 10A
OTS	Open Torque Switch	250V AC 10A
ACLS	Aux. Close Limit Switch	250V AC 16A
AOLS	Aux. Open Limit Switch	250V AC 16A
TP	Thermal Protector	250V AC 15A

WARNING

Each other should be powered through its own individual switch on relay contacts o prevent cross feed between two or more actuators.

REA 3000	REA 300	**DWG NO**
REA 2000	REA 200	
REA 800	REA 150	**DEP:** R&D
REA 600		
110V AC **220V AC**	**DATE:** 10.09.2016	

SMS Sanayi Malzemeleri Satışı ve Üretim A.Ş